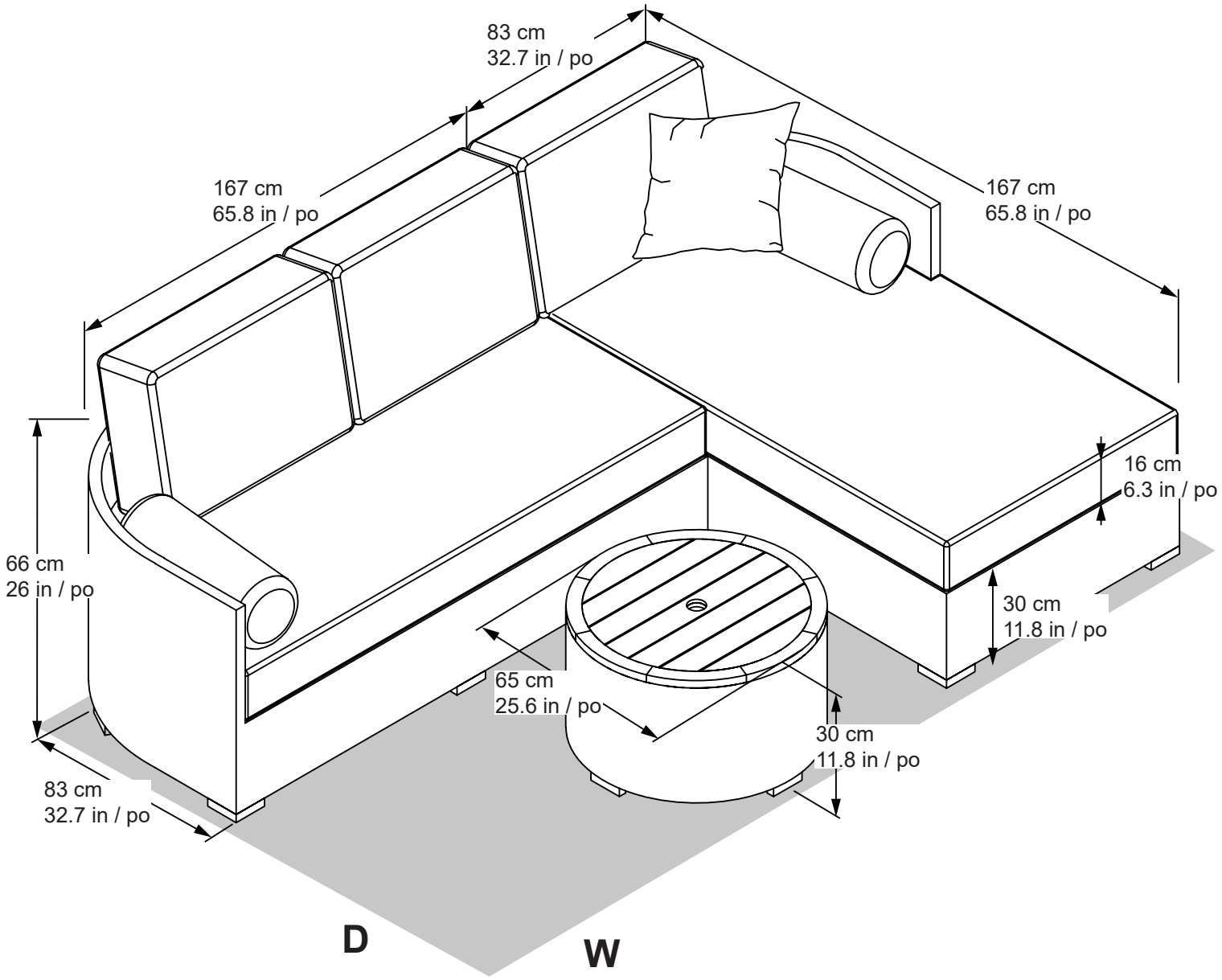

MINIMUM FLOOR SPACE
SURFACE MINIMALE
SUPERFICIE MÍNIMA

W: 2.5 m / 8.2 ft / pi

D: 1.7 m / 5.6 ft / pi